LoRaWAN Advanced Triaxial Vibration Sensor

Smart Factory

SKU: LRWEX-V3A



Safe Zone

Hazardous Zones

LRWEX-V3A is an ATEX/IECEx-certified wireless vibration sensor designed for high-frequency condition monitoring of industrial rotating equipment in hazardous areas. The sensor integrates three DC-coupled MEMS accelerometers to provide true 3-axis acceleration measurement with a ±100 g range and usable bandwidth from DC up to 11 kHz. It supports time waveform and FFT-based vibration analysis, including acceleration RMS, peak, peak-to-peak, crest factor, and optional band-limited velocity RMS calculation. Powered by a single LS26500 primary lithium battery and housed in an IP67 enclosure, the device is intended for long-term LoRaWAN-based monitoring in Zone 1/Zone 2 hazardous locations with target marking Ex ib IIC T4 Gb. For full high-frequency performance, direct screw or stud mounting is recommended.

Applications

Vibration Monitoring, Condition Monitoring, Predictive Maintenance

Notes For Applications

Measure 3-axis dynamic vibration and static acceleration components / 8 vibration values for each axis + surface temperature + FFT like Motor, Bearing, Pump, Fan, Gearbox, Rotary machine/ equipment… with vibration from 2 to 11,000 Hz. Deliver the overall calculated parameters: RMS acceleration, RMS and peak velocity, RMS and peak-peak displacement, frequency, temperature and crest factor.

- **Ultra-low Noise MEMS 11-KHz Vibration Sensor**
  Delivery accuracy and high resolution measurement
- **Multiple outputs with FFT values**
  Smart Firmware deliver time-domain outputs and FFT frequency-domain outputs
- **ATEX IECEx Zone 1 and Zone 2**
  For Petro-Chem, Oil & Gas and Energy Industries
- **10-year Battery**
  Ultra-low-power Design for both Hardware and Firmware

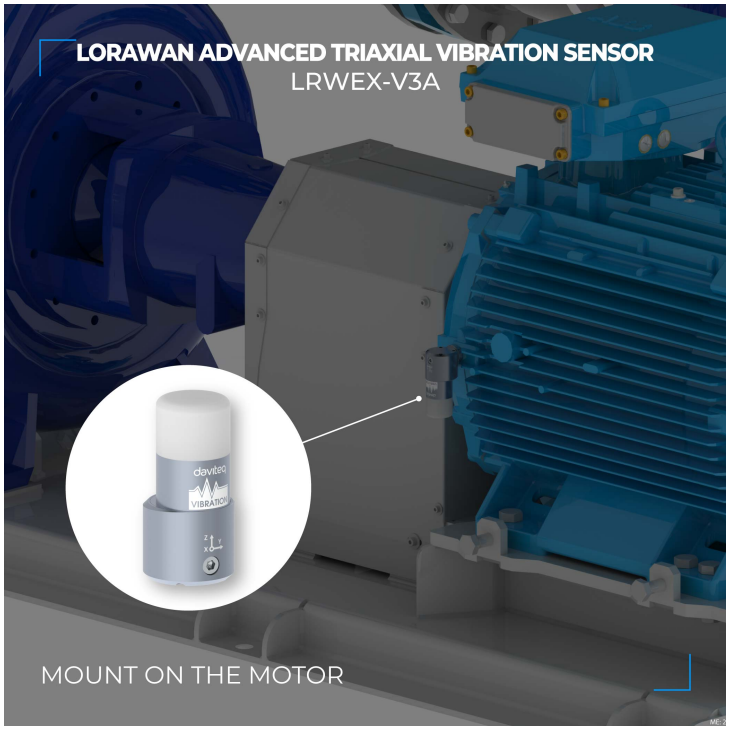

DAVITEQ TECHNOLOGIES INC
Ho Chi Minh City, VN | Koblenz, DE | Melbourne, AU | Zurich, CH
+84.28.6268.2523 / 6268.2524
info@daviteq.com **www.iot.daviteq.com**
Created date: May-21-2026 | Updated date: Jul-31-2026

Specification

Sensor Type	Ultra-low noise 3-axis digital MEMS vibration sensor
Measurement axes	X, Y, Z
Frequency Bandwidth	Select 11KHz or 6KHz, +/- 3dB
Acceleration range	+/- 100G or 50G for 11KHz version, 16G for 6 KHz version
Sampling rate	26 .. 48 kHz
Resolution	16 .. 20 bit
Sensitivity	0.2 mg/LSB for 11KHz version | 0.488 mg/LSB for 6KHz version
Integrated noise, 0–11 kHz for 11KHz version	~3.15 mg RMS for all axes
Integrated noise, 0–1 kHz for 11KHz version	~0.95 mg RMS for all axes
Integrated noise, 0–6.3 kHz for 6KHz version	X/Y 6 mg RMS, Z 8.7 mg RMS
Integrated noise, 0–1 kHz for 6KHz version	X/Y 2.4 mg RMS, Z 3.5 mg RMS for 6KHz version
Surface temperature measurement	-40 .. + 85 oC with +/- 0.5 oC accuracy typ. after calibration
Measurement Output	8 vibration values for each axis + surface temperature + FFT
SF Factors	SF7～SF12
Antenna	Internal Antenna ~1.5 dbi
Power	01 x Saft LS26500 with connector, battery not included
RF Frequency and Power	860～930MHz, 14～20 dBm, configurable for zones: EU868, IN865, RU864, KR920, AS923, AU915, US915
Protocol	LoRaWAN®, class A
Data sending modes	Interval time and when alarm occurred
Certification	CE, FCC, ATEX, IECEx (under testing)
Standard	IEC-EN60079-0, IEC-EN60079-11
Ambient working temperature	-20～60℃
Ambient storage temperature	-40～85℃
Dimensions	H100xW48.8xD46
Net-weigh	<250g not included battery
Housing	Anodized Aluminum, Polycarbonate
Ingress Protection	IP67
Mounting	304SUS screw M6, 304SS adhesive base come as standard, optional magnetic base (buy separately)

DAVITEQ TECHNOLOGIES INC
Ho Chi Minh City, VN | Koblenz, DE | Melbourne, AU | Zurich, CH
+84.28.6268.2523 / 6268.2524
info@daviteq.com **www.iot.daviteq.com**
Created date: May-21-2026 | Updated date: Jul-31-2026

LORAWAN ADVANCED TRIAXIAL VIBRATION SENSOR
LRWEX-V3A



INSTALLATION

SYSTEM ARCHITECTURE
LoRaWAN

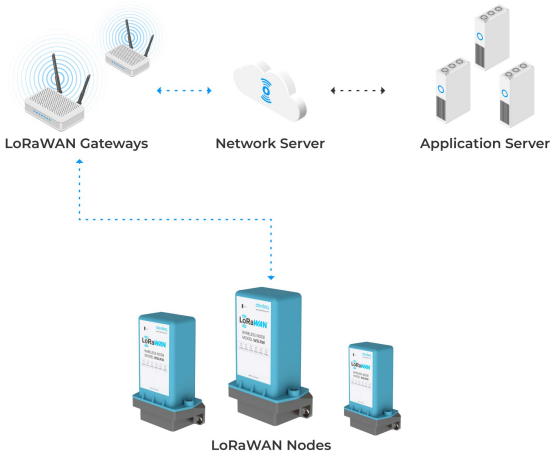

LORAWAN ADVANCED TRIAXIAL VIBRATION SENSOR
LRWEX-V3A

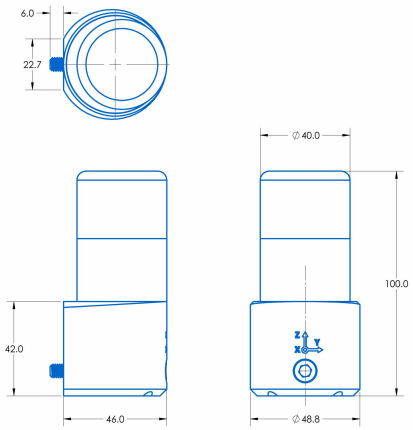

DIMENSION DRAWING OF
WIRELESS NODE (Unit: mm)

RECOMMENDED BATTERIES



LS 26500
Lithium battery

-60~85°C working temperature
Low self-discharge rate
7.7 Ah capacity

POWERED BY PRIMARY BATTERY

DAVITEQ TECHNOLOGIES INC
Ho Chi Minh City, VN | Koblenz, DE | Melbourne, AU | Zurich, CH
+84.28.6268.2523 / 6268.2524
info@daviteq.com **www.iot.daviteq.com**
Created date: May-21-2026 | Updated date: Jul-31-2026

Ordering Information

Item codes	Descriptions
LRWEX-V3A-11-100	LoRaWAN Advanced Triaxial Vibration Sensor, 11KHz, 100G
LRWEX-V3A-6-16	LoRaWAN Advanced Triaxial Vibration Sensor, 6KHz, 16G

DAVITEQ TECHNOLOGIES INC
Ho Chi Minh City, VN | Koblenz, DE | Melbourne, AU | Zurich, CH
+84.28.6268.2523 / 6268.2524
info@daviteq.com **www.iot.daviteq.com**