LoRaWAN NDIR C3H8 and CH4 Gas Sensor

Smart Building, Smart Facility, Smart Factory, Smart Transportation

SKU: WSLRW-NDIR



Safe Zone

Hazardous Zones

WSLRW-NDIR is a LoRaWAN sensor designed to measure flammable gas concentrations (CH4, C3H8). It features high-performance, ultra-low-power gas sensing technology to accurately detect specific gas concentrations in the air. its ultra-low-power design and smart firmware enable the sensor to operate on a single battery for 5-10 years. It supports all LoRaWAN frequency plans, making it versatile for global use. The sensor is ideal for monitoring gas concentrations in industrial or commercial buildings in the areas of kitchens, farm, parking garages, boiler rooms, laboratories, basements, HVAC rooms, utility rooms, industrial workspaces and more.

Applications

Indoor Air Quality Monitor, Gas Analyzing, Warehouse Monitoring, Gas Leakage Detection

Notes For Applications

Select the suitable sensor range to get the highest accuracy vs. sensor life. Lifetime is 7 years for NDIR sensors, depending on sensor type and actual operating conditions. Calibration cycles are about 30 months for the NDIR sensor, depending on actual operating conditions. Check carefully the working temperature and humidity of the application.

LoRaWAN communication
LoRaWAN communication standard to allow sensor connect to any LoRaWAN Gateway on the market

5-10 years battery
Daviteq's ultra-low power sensing and wireless technology, smart firmware to allow the sensor last up to 5-10 years battery life

High Accuracy & Stable Measurement
Advanced Non-Dispersive Infrared gas sensor technology processing to deliver high accuracy and stable measurement

Indoor and outdoor applications
Optional rain guard to install outdoor environment

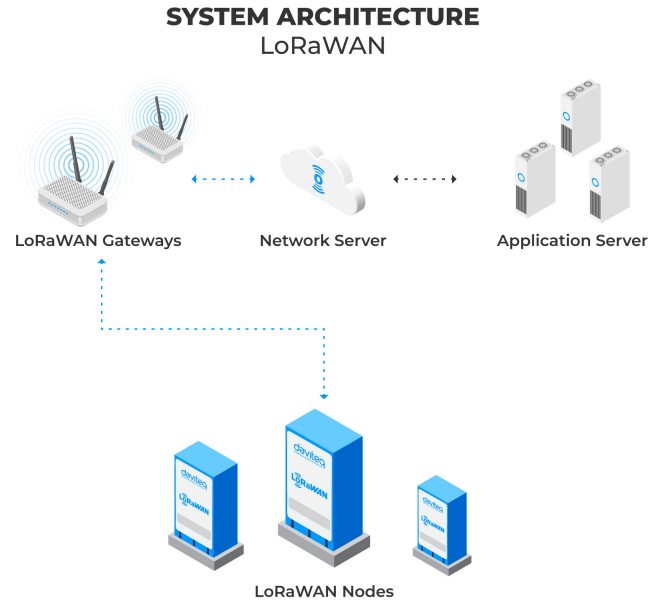

DAVITEQ TECHNOLOGIES INC
Ho Chi Minh City, VN | Koblenz, DE | Melbourne, AU | Zurich, CH
+84.28.6268.2523 / 6268.2524
info@daviteq.com **www.iot.daviteq.com**
Created date: Mar-09-2026 | Updated date: Jul-27-2026

Specification

Type of measuring gas	Select CH_4 or C_3H_8 with range when ordering
Measurement technology	High performance Non-Dispersive Infrared (NDIR) sensor
Measuring range	CH_4 0-500 ppm/0-1000 ppm/0-10000 ppm, C_3H_8 0-500 ppm
Warm-up time	≤ 120
Response time (T90)	< 30s (CH_4 sensors) ,≤ 45 (C_3H_8 sensors)
Measurement variation	for CH_4 it is ±0.1% vol. or ±5% of reading (whichever is greater) in the 20～25℃ temperature range and for C_3H it is ±0.05% vol. or ±5% of reading (whichever is greater) in the 20～25℃
Temperature | Humidity | Operating pressure	-40～60℃/ 0～98% RH, non-condensing/ 80kPa～120kPa
COMMUNICATION	
SF Factors	SF7～SF12
Antenna	Internal Antenna 2.0 dbi
Battery	02 x AA size 1.5VDC, battery not included
RF Frequency and Power	860～930MHz, 14～20 dBm, configurable for zones: EU868, IN865, RU864, KR920, AS923, AU915, US915
Protocol	LoRaWAN, class A
Data sending mode	Cycle, alarm and magnet key.
RF module compliant	ETSI EN 300 220, EN 303 204 (Europe) FCC CFR47 Part15 (USA), ARIB STD-T108 (Japan)
Configuration	Via downlink (only for some configurations) or USB cable (PC software provided free of charge)
Housing/Protection	Aluminum + Polycarbonate/ IP64 (recommend to use rain-guard for outdoor installation)
Dimension/ Net weight	H180xW73xD47/ < 400g
Installation	Wall mounting with screws

DAVITEQ TECHNOLOGIES INC
Ho Chi Minh City, VN | Koblenz, DE | Melbourne, AU | Zurich, CH
+84.28.6268.2523 / 6268.2524
info@daviteq.com **www.iot.daviteq.com**







LORAWAN NDIR GAS SENSOR
WSLRW-NDIR

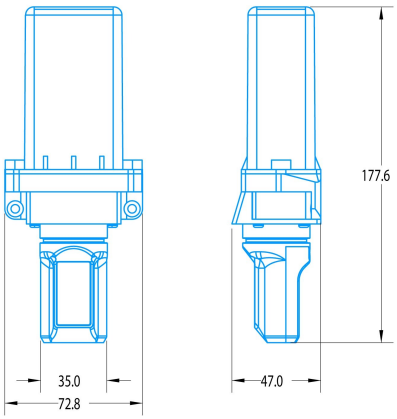

DIMENSION DRAWING OF
WIRELESS NODE (Unit: mm)

RECOMMENDED BATTERIES



E91 AA
Alkaline battery

-18~60°C working temperature
10-year shelf life
3000 mAh capacity
Price: 1X

L91 AA
Lithium battery

-40~60°C working temperature
20-year shelf life
3500 mAh capacity
Price: 3.5X

POWERED BY PRIMARY BATTERY

LORAWAN NDIR GAS SENSOR
WSLRW-NDIR

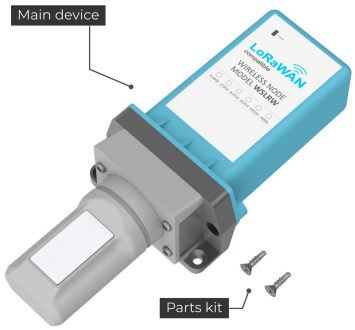

PRODUCT PACKAGE

DAVITEQ TECHNOLOGIES INC
Ho Chi Minh City, VN | Koblenz, DE | Melbourne, AU | Zurich, CH
+84.28.6268.2523 / 6268.2524
info@daviteq.com **www.iot.daviteq.com**
Created date: Mar-09-2026 | Updated date: Jul-27-2026

Ordering Information

ITEM CODE	DESCRIPTIONS
WSLRW-NDIR-CH4-500	LORAWAN NDIR PPM RANGE GAS SENSOR,CH4 - 500 PPM
WSLRW-NDIR-CH4-1000	LORAWAN NDIR PPM RANGE GAS SENSOR,CH4 -1000 PPM
WSLRW-NDIR-CH4-10K	LORAWAN NDIR PPM RANGE GAS SENSOR,CH4 -10000 PPM
WSLRW-NDIR-C3H8-500	LORAWAN NDIR PPM RANGE GAS SENSOR,C3H8 - 500 PPM
Accessories and optional items	
ACC-G4-RAINGUARD-01	Rain guard for Gas Sensor
ACC0G4-SG-01	Splash guard for Gas Sensor
CALGAS-CH4-02	02-point Calibration Services for CH4
CALGAS-C3H8-02	02-point Calibration Services for C3H8
ACC-G4-CALCAP-01	Accessories for gas sensor calibration cap, type 01

DAVITEQ TECHNOLOGIES INC
Ho Chi Minh City, VN | Koblenz, DE | Melbourne, AU | Zurich, CH
+84.28.6268.2523 / 6268.2524
info@daviteq.com **www.iot.daviteq.com**